Data Sheet

Article number: 20343232M850OS
Description: E+G Levelling foot
GN 343.2-32-M8-50-OS
Note: 0

Measures

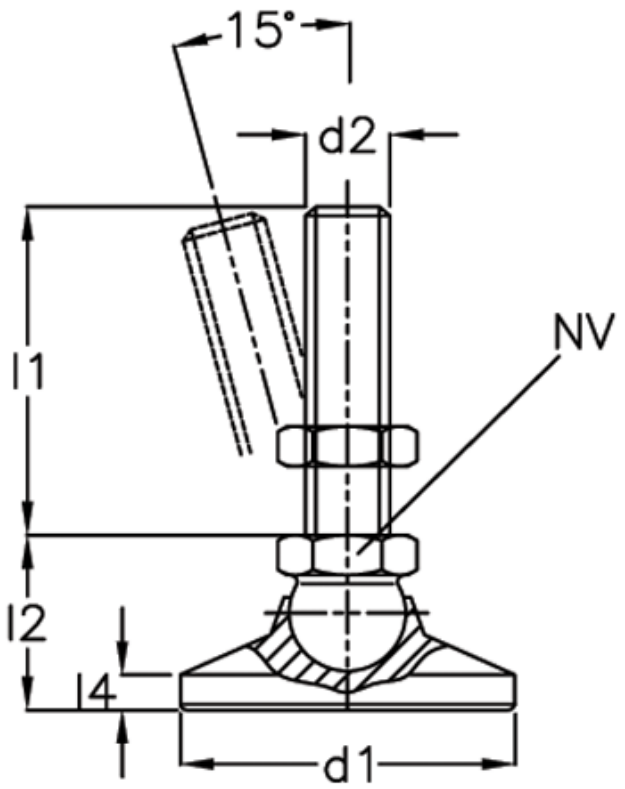

d1 = 32	Static load = 14
d2 = M8	Weight in (g) = 57
l1 = 50	
l2 = 23	
l3 = -	
l4 = 5	
l5 = -	
NV = 12	

Product drawings and brochures of any kind may contain errors for which Brd. Klee A/S cannot be liable.